SCALE 10%
OF ACTUAL SIZE

AirDome 17’x17’

17x17 Top

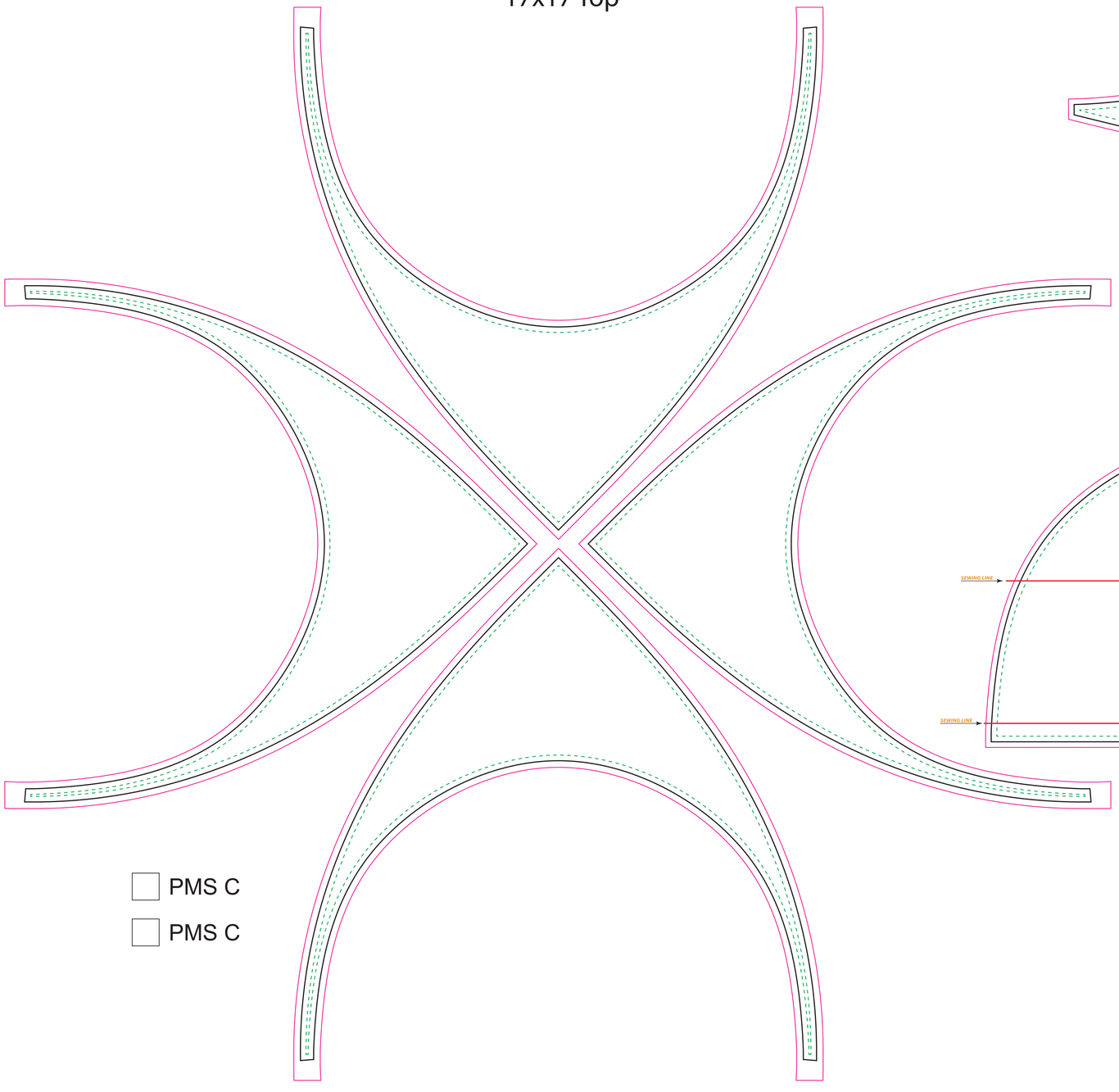

PMS C

PMS C

17’ AirDome Awnings

Attached Side

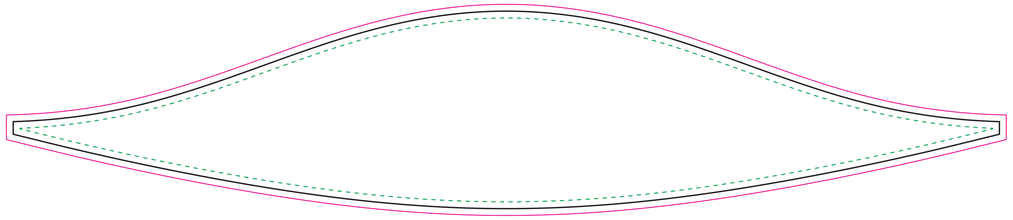

AirDome Awnings Banners Template

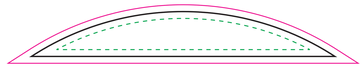

17’ Wall

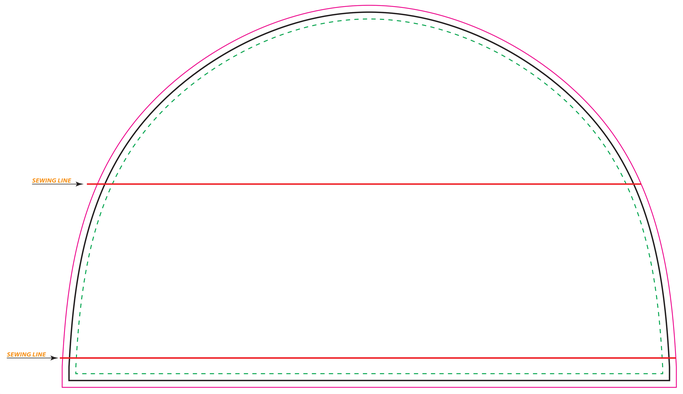

17’ Wall w/ Window

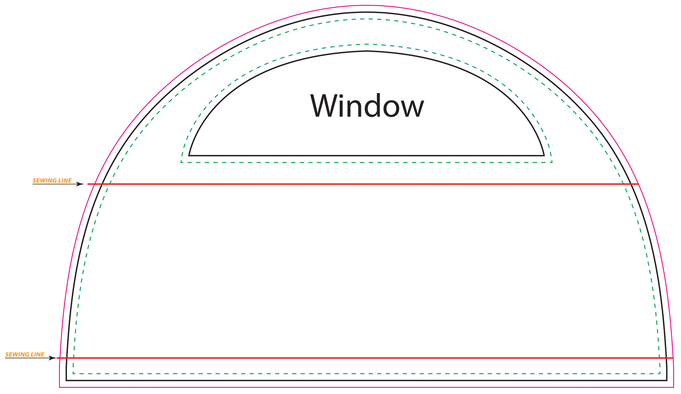

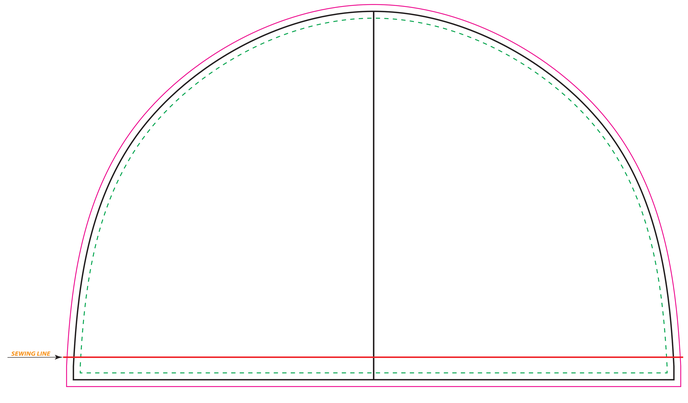

Adobe Illustrator (Mac or PC) - convert your fonts to outlines and save as native Illustrator format (ai). Artwork should be in only vector format. Artwork should be in CMYK.

Adobe Photoshop (Mac or PC) - rasterize your fonts and save files as .psd (if you have layers) (or need transparency). Will also accept Photoshop EPS formats. Image resolution should be 150 dpi at 100% size the artwork is to be printed at. (or 300 dpi and 1/2 the actual size to be printed)

- All fonts need to be outlines in order to avoid any defaulted text
- Digital imaging will be output in CMYK process
- Use ZIP compression for multiple files

Trim Line Safe Guide Bleed Sewing line *sewing line can be adjusted, *extra fees may apply*